Calculating Load
or
What will I run?

Class 4 for Solar Team 4


FLUSTAR


What *CAN* I run?


Will this work?


or do I need a bigger panel?

Load

is the number of watt/hours
and amp/hours you will drawing
from your system.

It's a start to know the number of watts
each appliance needs to run.

The homework from the last class
was supposed to prepare you....

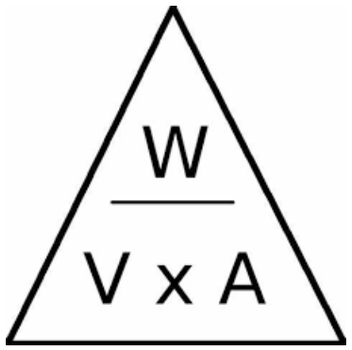

HOMEWORK

Make a wish list of appliances to run on your system.

APPLIANCE	VOLTS	X AMPS	= WATTS

Most appliances have a label,
often hard to read.
Try to get whatever info you can find.

sometimes its hard to find anything

decimal placing

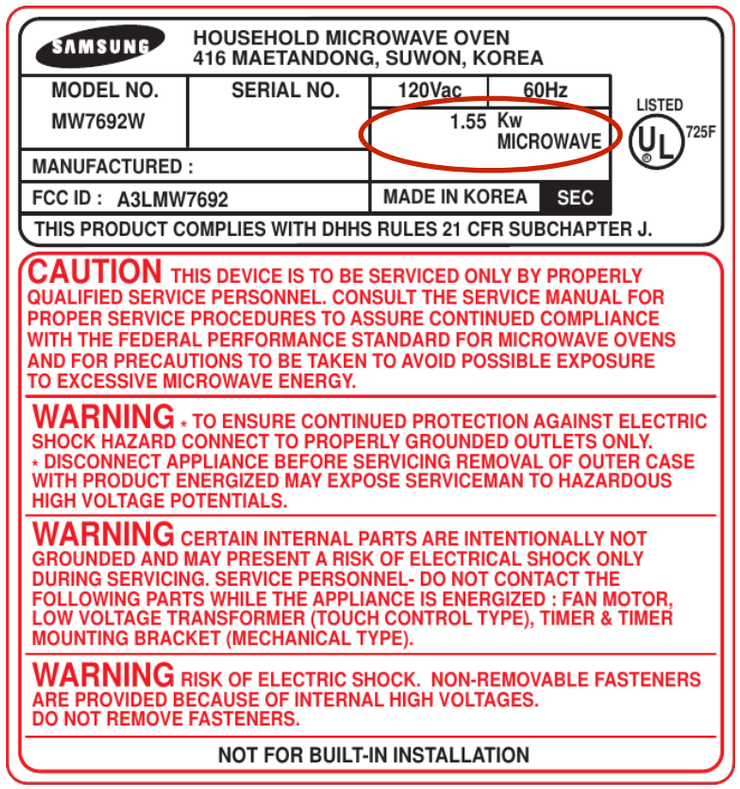

SAMSUNG
HOUSEHOLD MICROWAVE OVEN
416 MAETANDONG, SUWON, KOREA

MODEL NO.	SERIAL NO.	120Vac	60Hz
MW7692W		1.55 Kw MICROWAVE	
MANUFACTURED :			
FCC ID : A3LMW7692		MADE IN KOREA	SEC

LISTED UL 725F

THIS PRODUCT COMPLIES WITH DHHS RULES 21 CFR SUBCHAPTER J.

CAUTION THIS DEVICE IS TO BE SERVICED ONLY BY PROPERLY QUALIFIED SERVICE PERSONNEL. CONSULT THE SERVICE MANUAL FOR PROPER SERVICE PROCEDURES TO ASSURE CONTINUED COMPLIANCE WITH THE FEDERAL PERFORMANCE STANDARD FOR MICROWAVE OVENS AND FOR PRECAUTIONS TO BE TAKEN TO AVOID POSSIBLE EXPOSURE TO EXCESSIVE MICROWAVE ENERGY.

WARNING • TO ENSURE CONTINUED PROTECTION AGAINST ELECTRIC SHOCK HAZARD CONNECT TO PROPERLY GROUNDED OUTLETS ONLY.
• DISCONNECT APPLIANCE BEFORE SERVICING REMOVAL OF OUTER CASE WITH PRODUCT ENERGIZED MAY EXPOSE SERVICEMAN TO HAZARDOUS HIGH VOLTAGE POTENTIALS.

WARNING CERTAIN INTERNAL PARTS ARE INTENTIONALLY NOT GROUNDED AND MAY PRESENT A RISK OF ELECTRICAL SHOCK ONLY DURING SERVICING. SERVICE PERSONNEL- DO NOT CONTACT THE FOLLOWING PARTS WHILE THE APPLIANCE IS ENERGIZED : FAN MOTOR, LOW VOLTAGE TRANSFORMER (TOUCH CONTROL TYPE), TIMER & TIMER MOUNTING BRACKET (MECHANICAL TYPE).

WARNING RISK OF ELECTRIC SHOCK. NON-REMOVABLE FASTENERS ARE PROVIDED BECAUSE OF INTERNAL HIGH VOLTAGES. DO NOT REMOVE FASTENERS.

NOT FOR BUILT-IN INSTALLATION

Hamilton Beach Brands, Inc.
TYPE T56 TOASTER
120V~ 60Hz 900W
U.S. PAT. D378,071, D398,475
c UL us LISTED 516B
HOUSEHOLD USE ONLY
WARNING: TO PREVENT ELECTRICAL SHOCK, UNPLUG BEFORE CLEANING. MADE IN CHINA
PARA USO DOMÉSTICO SOLAMENTE
ATTENCION: PARA PREVENIR CHOQUE ELECTRICO, DESENCHUFE ANTES DELIMPIAR. HECHO EN CHINA
POUR USAGE DOMESTIQUE SEULEMENT
ADVERTISSMENT: POUR EVITER UN CHOCS ELECTRIQUES, DEBRANCHER AVANT DE NETTOYAGE FABRIQUE EN CHINE
MODEL 22655C SERIES A3580BI

hard to see

too much info
208V x 22A = 4576W

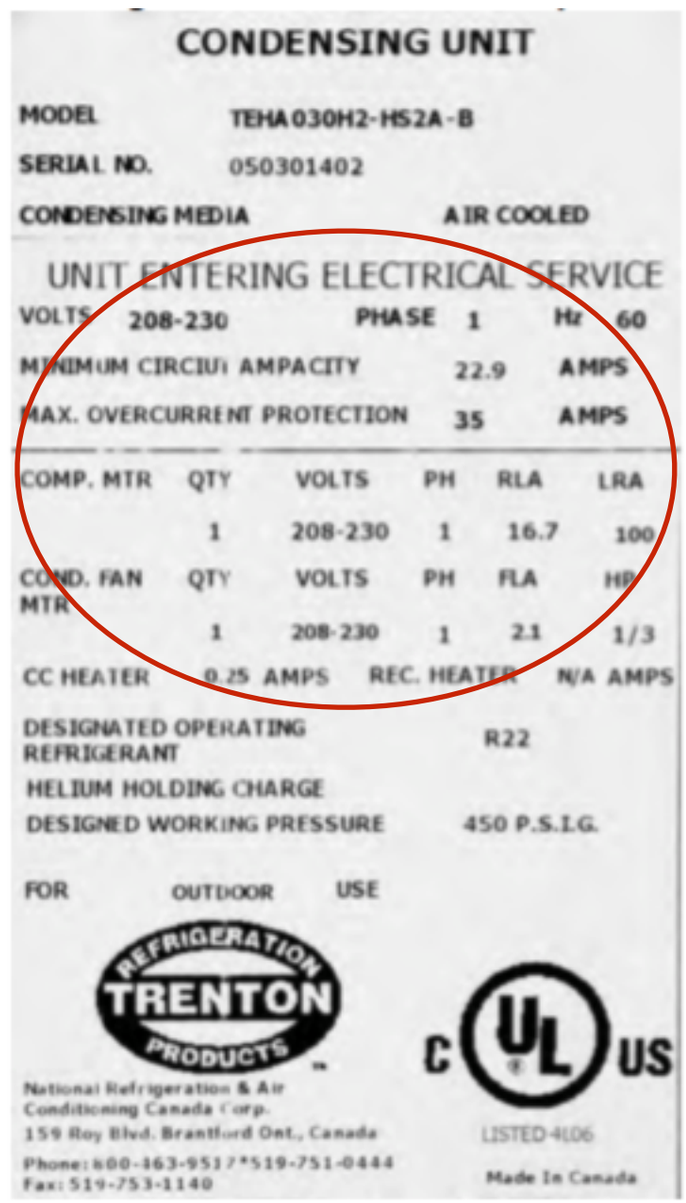

CONDENSING UNIT

MODEL TEHA030H2-HS2A-B
SERIAL NO. 050301402
CONDENSING MEDIA AIR COOLED

UNIT ENTERING ELECTRICAL SERVICE

VOLTS 208-230 PHASE 1 Hz 60
MINIMUM CIRCUIT AMPACITY 22.9 AMPS
MAX. OVERCURRENT PROTECTION 35 AMPS

COMP. MTR	QTY	VOLTS	PH	RLA	LRA
	1	208-230	1	16.7	100
COND. FAN MTR	QTY	VOLTS	PH	FLA	HP
	1	208-230	1	2.1	1/3

CC HEATER 0.25 AMPS REC. HEATER N/A AMPS

DESIGNATED OPERATING REFRIGERANT R22
HELIUM HOLDING CHARGE
DESIGNED WORKING PRESSURE 450 P.S.I.G.

FOR OUTDOOR USE

REFRIGERATION TRENTON PRODUCTS
National Refrigeration & Air Conditioning Canada Corp.
159 Roy Blvd. Brantford Ont., Canada
Phone: 800-363-9517*519-751-0444
Fax: 519-753-1140
c UL us LISTED 4L06
Made In Canada

impossible to see

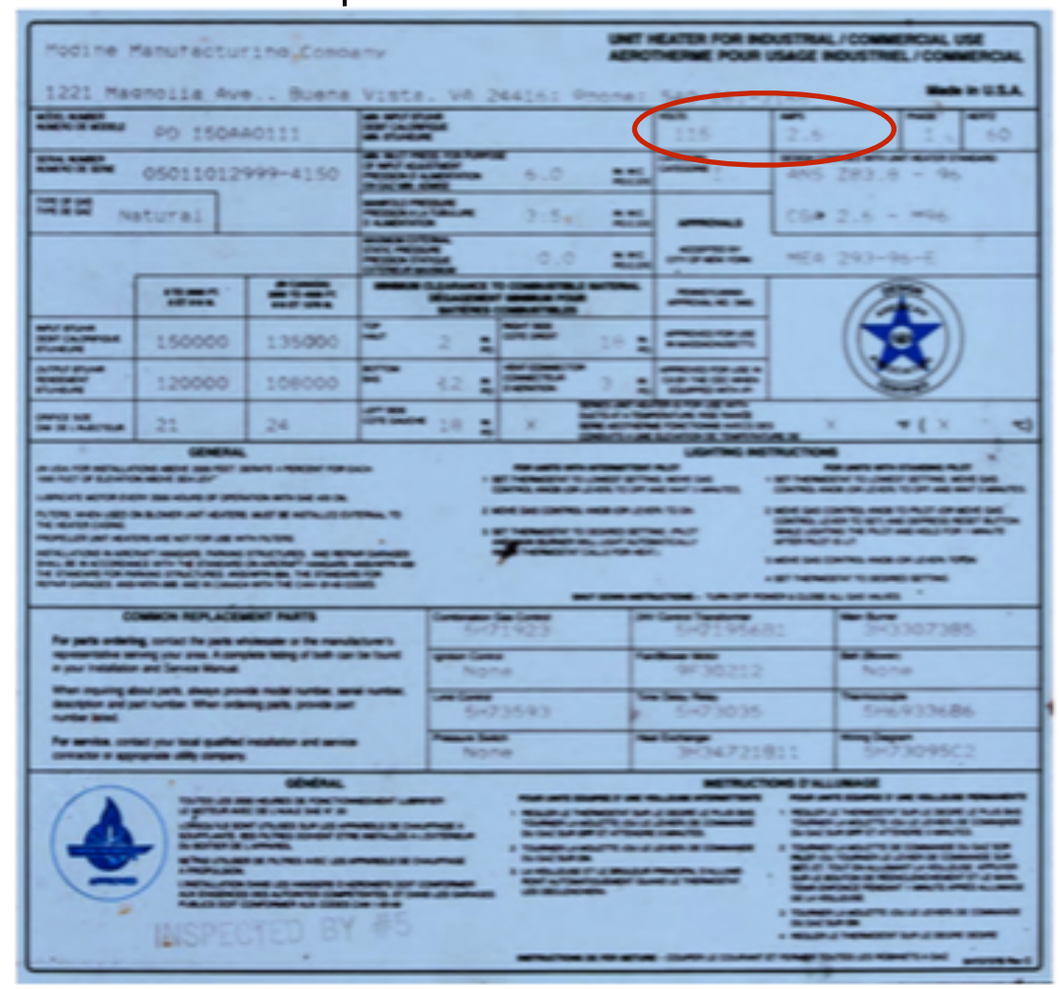

Modine Manufacturing Company
1221 Magnolia Ave., Buena Vista, VA 24416
UNIT HEATER FOR INDUSTRIAL/COMMERCIAL USE
AEROTHERME POUR USAGE INDUSTRIEL/COMMERCIAL
Made in U.S.A.
PO 150AA0111
05011012999-4150
Natural
115 2.6 1 60
ANSI Z83.8 - 96
CSA 2.6 - 96
HEA 293-96-E
150000 135000
120000 108000
21 24
GENERAL
LIGHTING INSTRUCTIONS
COMMON REPLACEMENT PARTS
INSPECTED BY #5

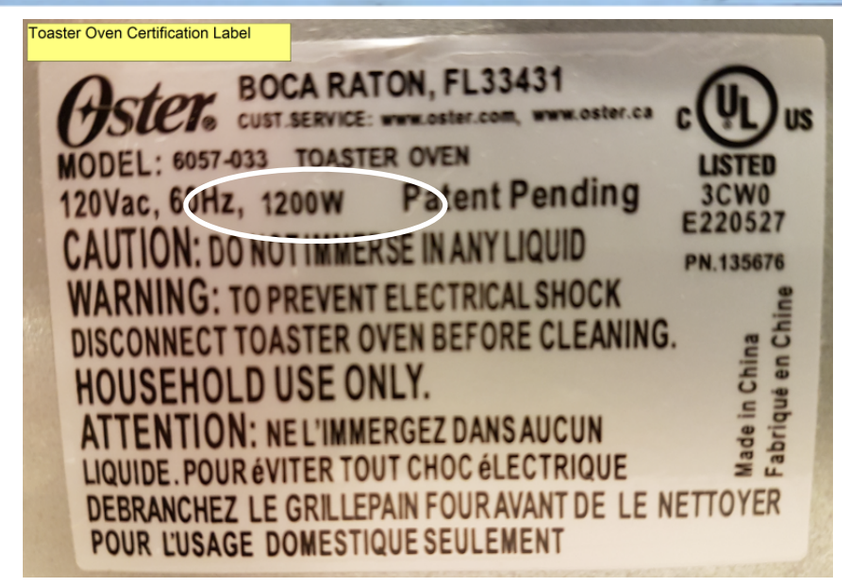

Toaster Oven Certification Label

Oster® BOCA RATON, FL33431
CUST.SERVICE: www.oster.com, www.oster.ca
c UL us LISTED 3CW0 E220527
MODEL: 6057-033 TOASTER OVEN
120Vac, 60Hz, 1200W Patent Pending
PN.135676
CAUTION: DO NOT IMMERSE IN ANY LIQUID
WARNING: TO PREVENT ELECTRICAL SHOCK DISCONNECT TOASTER OVEN BEFORE CLEANING.
HOUSEHOLD USE ONLY.
ATTENTION: NE L'IMMERGEZ DANS AUCUN LIQUIDE. POUR éVITER TOUT CHOC éLECTRIQUE DEBRANCHEZ LE GRILLEPAIN FOUR AVANT DE LE NETTOYER
POUR L'USAGE DOMESTIQUE SEULEMENT
Made in China Fabriqué en Chine

unusually clear

Did you notice how much more power is required by heating vs. electronics?

Heating & Air-Conditioning	Typical Wattage (Watts)	Avg. Hrs Usage/ Month	Avg. kWh/ Month	Typical Cost/ Month
Portable A.C. - 5,000 BTU	500	200	75.0	$5.18
Window A.C. - 10,000 BTU	1,000	200	150.0	$10.35
Dehumidifier - 65 pint	790	90	71.1	$4.91
Dehumidifier, Whole-house, Energy Star	111	720	79.9	$5.51
4' Baseboard	1,000	150	150.0	$10.35
6' Baseboard	1,500	240	360.0	$24.84
8' Baseboard -	2,000	240	480.0	$33.12
Electric Forced Air Furnace	10,000	150	1500.0	$103.50
Electric Forced Air Furnace	15,000	150	2250.0	$155.25
Electric Wall Heater	1,500	150	225.0	$15.53
Fan: Ceiling	100	360	36.0	$2.48
Fan: Exhaust, Mid-size	150	60	9.0	$0.62
Fan: Portable Box Fan -- 20"	100	180	18.0	$1.24
Fan: Oscillating	125	180	22.5	$1.55
Fan: Whole House	400	180	72.0	$4.97
Fan: Dual Unit	200	180	36.0	$2.48
Furnace Fan	350	300	105.0	$7.25
Heat Pump -- Ductless --	3,600	180	648.0	$44.71
Heat Pump -- Standard	5,000	150	750.0	$51.75
Portable Heater *Low* Setting	750	120	90.0	$6.21
Portable Heater *Medium* Setting	1,000	120	120.0	$8.28
Portable Heater *High* Setting	1,500	120	180.0	$12.42

Water Heating & Circulation	Typical Wattage (Watts)	Avg. Hrs Usage/ Month	Avg. kWh/ Month	Typical Cost/ Month
Aquarium Pump (10 Gal)	80	720	57.6	$3.97
Aquarium Pu[illegible]			[illegible]	$12.42
[illegible]				[illegible]
[illegible]eater: (30-50 Gal) High Efficiency	4,500	85.6	385.0	$26.57
H_2O Heater: (80 Gal)	4,500	94	423.0	$29.19
H_2O Heater: (80 Gal) High Efficiency	5,500	70	385.2	$26.58
Heat Pump H_2O Heater (50 Gal)	600	240	144.0	$9.94
Heat Pump H_2O Heater (80 Gal)	655	240	157.0	$10.83
Tankless H_2O Heater: 2 Users	14,000	22.5	315.0	$21.74
Tankless H_2O Heater: 4 Users	28,000	34	952.0	$65.69
Well Pump	660	60	39.6	$2.73

Laundry	Typical Wattage (Watts)	Avg. Hrs Usage/ Month	Avg. kWh/ Month	Typical Cost/ Month
Clothes Dryer	3,400	27	91.8	$6.33
Top-load Washer	477	27	12.9	$0.89
Top-load Washer Energy Star	322	36	11.6	$0.80
Front-load Washer Energy Star	150	36	5.4	$0.37
Front-load Washer "Most Efficient"	100	36	3.6	$0.25

based on $.069per kWh
Gallup cost is $.13 per kWh

Light Bulbs: think Lumens, not Watts

Lumens *More Lumens = Brighter*	800	1100	1600	2600
Old-fashioned Incandescents	60W	75W	100W	150W
Halogen Incandescents	43W	53W	72W	105W
Compact Fluorescents/CFLs	14W	18W	23W	36W
Light Emitting Diodes/LEDs	12W	14W	18W	N/A

Light Bulbs	Typical Wattage (Watts)	Avg. Hrs Usage/ Month	Avg. kWh/ Month	Typical Cost/ Month
800 Lumen Incandescent	60	240	14.0	$0.99
800 Lumen Halogen	43	240	10.3	$0.71
800 Lumen CFL	14	240	3.4	$0.23
800 Lumen LED	12	240	2.9	$0.20
1,100 Lumen Incandescent	75	240	18.0	$1.24
1,100 Lumen Halogen	53	240	12.7	$0.88
1,100 Lumen CFL	18	240	4.3	$0.30
1,100 Lumen LED	14	240	3.4	$0.23
1,600 Lumen Incandescent	100	240	24.0	$1.66
1,600 Lumen Halogen	72	240	17.3	$1.19
1,600 Lumen CFL	23	240	5.5	$0.38
1,600 Lumen LED	18	240	4.3	$0.30
2,600 Lumen Incandescent	150	240	36.0	$2.48
2,600 Lumen Halogen	105	240	25.2	$1.74
2,600 Lumen CFL	36	240	8.6	$0.59
4' Fluorescent 2-bulb Fixture	100	240	24.0	$1.66
High-Pressure Sodium Bulb	75	300	22.5	$1.55
Mercury Vapor	150	300	45.0	$3.11

Bulb Longevity:
Incandescent = 750 - 1,000 hours **Halogen** = 1,000 - 3,000 hours
CFL = 8,000 - 12,000 hours LED = 18,000 - 22,000 hours

Home Theater	Typical Wattage (Watts)	Avg. Hrs Usage/ Month	Avg. kWh/ Month	Typical Cost/ Month
DVD Player	12	150	2.8	$0.19
DVD Player -- Energy Star	6	[illegible]	1.3	$0.09
HD DVR Set-Top Box	[illegible]	[illegible]	[illegible]	$1.58
HD Receiver Set-Top Box	[illegible]	[illegible]	[illegible]	$0.98
Satellite Dish	15	[illegible]	[illegible]	$0.12
Surround-sound	6	75	0.5	$0.03
35" LCD TV	65	150	10.1	$0.70
35" LED TV	100	150	15.0	$1.04
45" LCD TV	110	150	17.0	$1.17
45" LED TV	127	150	19.1	$1.31
46" Plasma TV	225	150	33.8	$2.33
55" LCD TV	155	150	23.3	$1.61
55" LED TV	165	150	25.3	$1.75
54" Plasma TV	325	150	48.8	$3.36
2013 Microsoft Xbox One	110	174	20.0	$1.38
2010 Nintendo Wii	14	174	2.4	$0.17
2013 Sony Playstation 4	137	171	24.2	$1.67

vs. surround sound

Office Equipment	Typical Wattage (Watts)	Avg. Hrs Usage/ Month	Avg. kWh/ Month	Typical Cost/ Month
Computer & Monitor	100	120	12.0	$0.83
Laptop	21	90	1.9	$0.13
Modem	6	180	1.1	$0.08
Ink-jet (standby)	7	705	4.9	$0.34
Ink-jet (printing)	64	15	1.0	$0.07
Laser Printer (standby)	19	705	13.4	$0.92
Laser Printer (printing)	130	15	2.0	$0.13
Wireless Router	6	180	1.1	$0.07

Now we need to find out
how much power
your solar system
can actually produce.

How many watt hours (WH)
can I get out of my two 100W panels
if, as shown, they are wired in parallel?

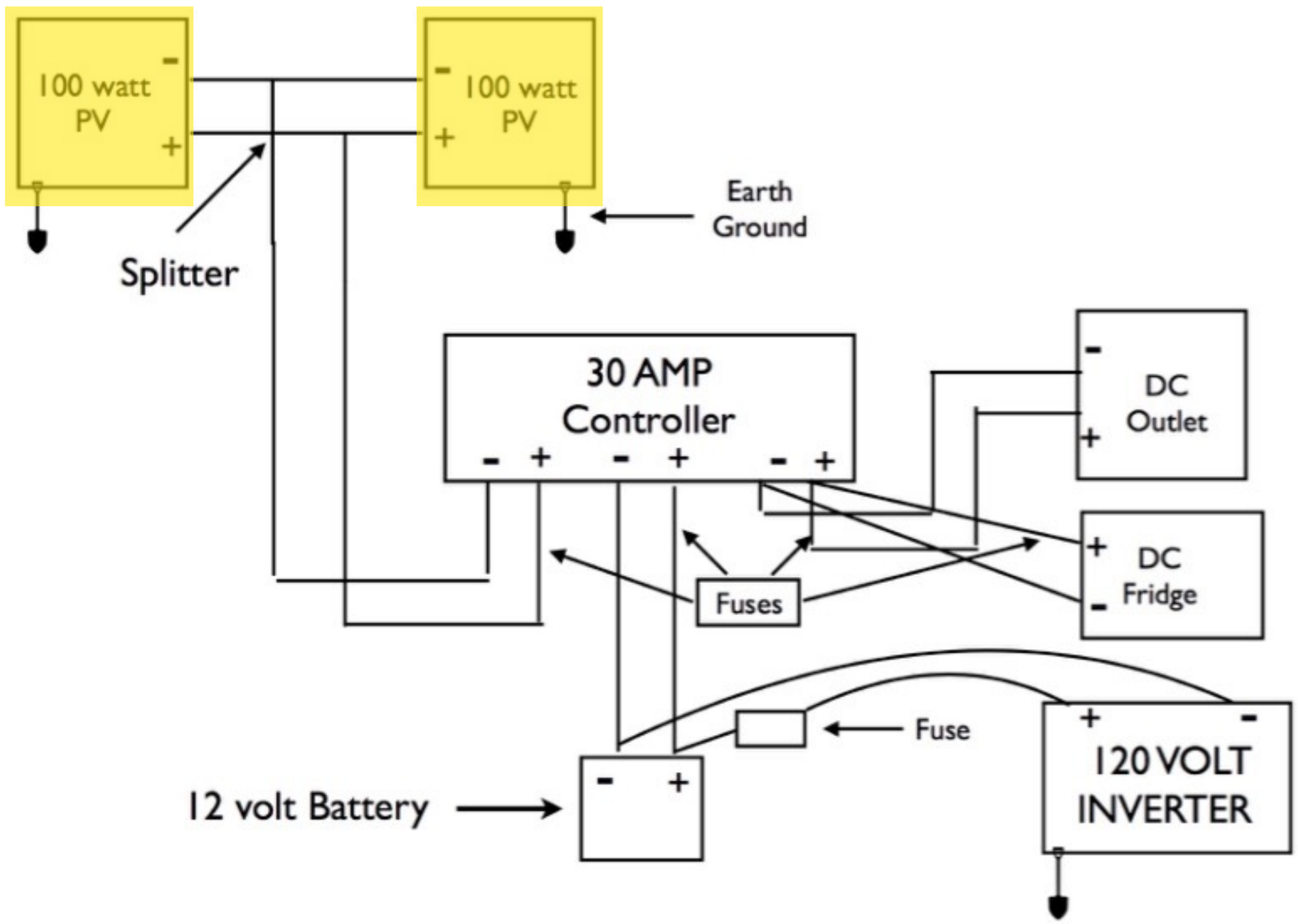

Ans: 200W x Sun hours

How many hours of sun do we have? Six.
How many PV watts do you have? Two hundred.
Multiply sun hours x watts to get watt hours.

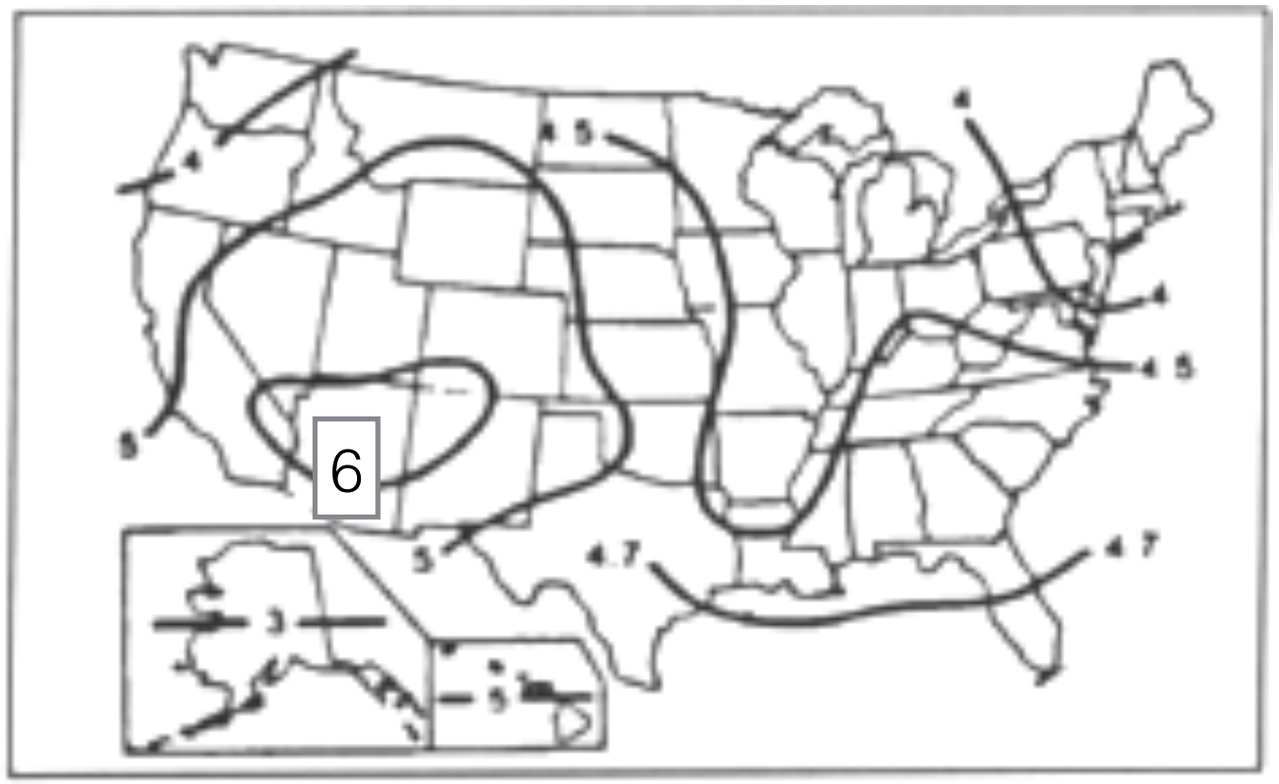

Average Sun Hours Year-Round

You can produce 1200 watt hours!

But to be safe you have to factor in system losses:
voltage drop, passing clouds, inefficiencies
and reduce it by 1/3 to

800 WH.

Sun hours are fewer in the winter
but overall you are probably ok
with the estimate of 800W/H per day

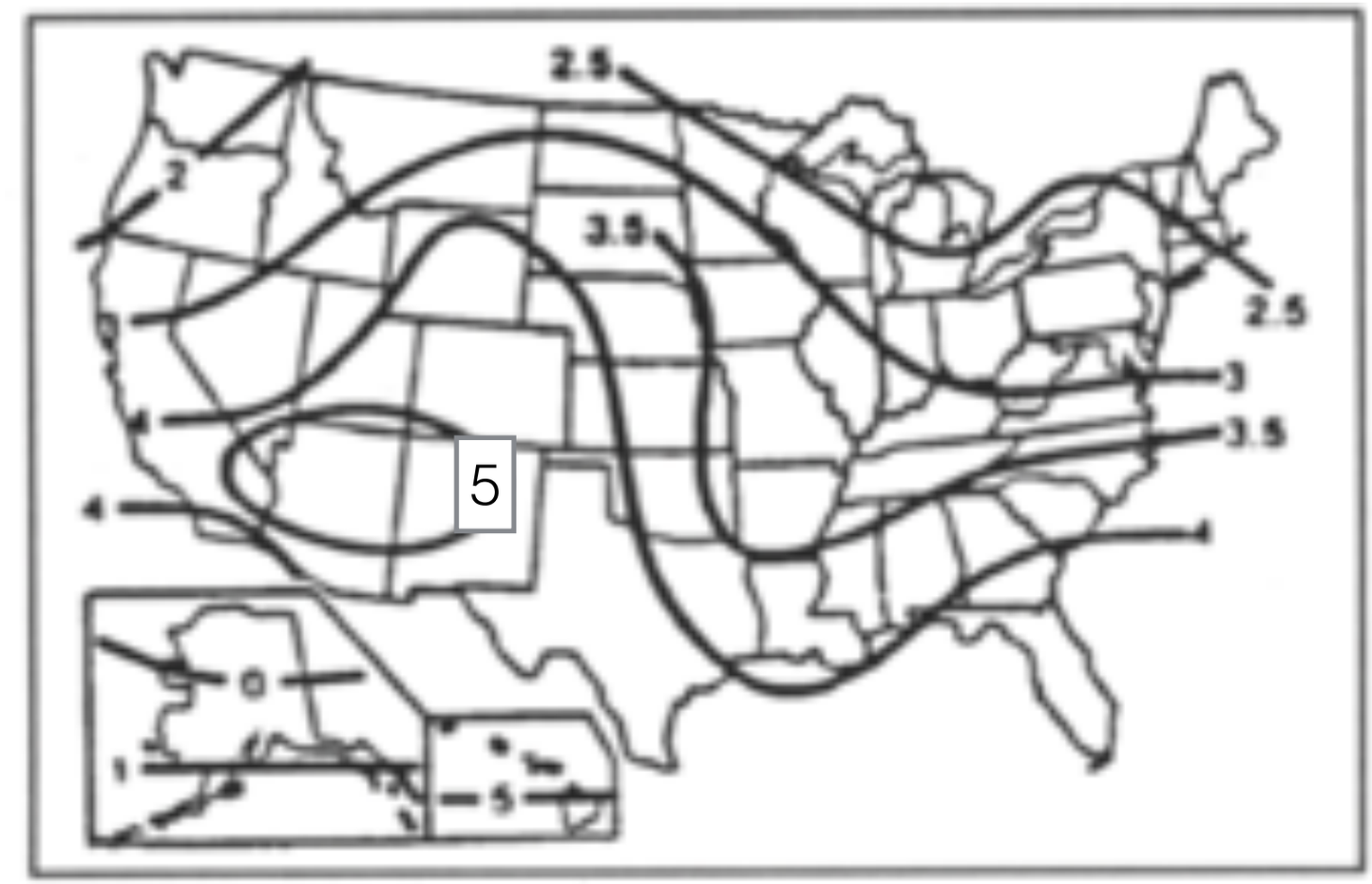

Sun Hours per Day Dec-Jan

But it’s not enough to know
how many watt hours you can produce.
You need to know
how many amp hours
will be delivered to your battery.

Watts Law again
Watts ÷ Volts = Amps

800WH per day ÷ 12V = 67 AH (amp hours)

67 AH

How many amp hours (AH) can my battery hold?

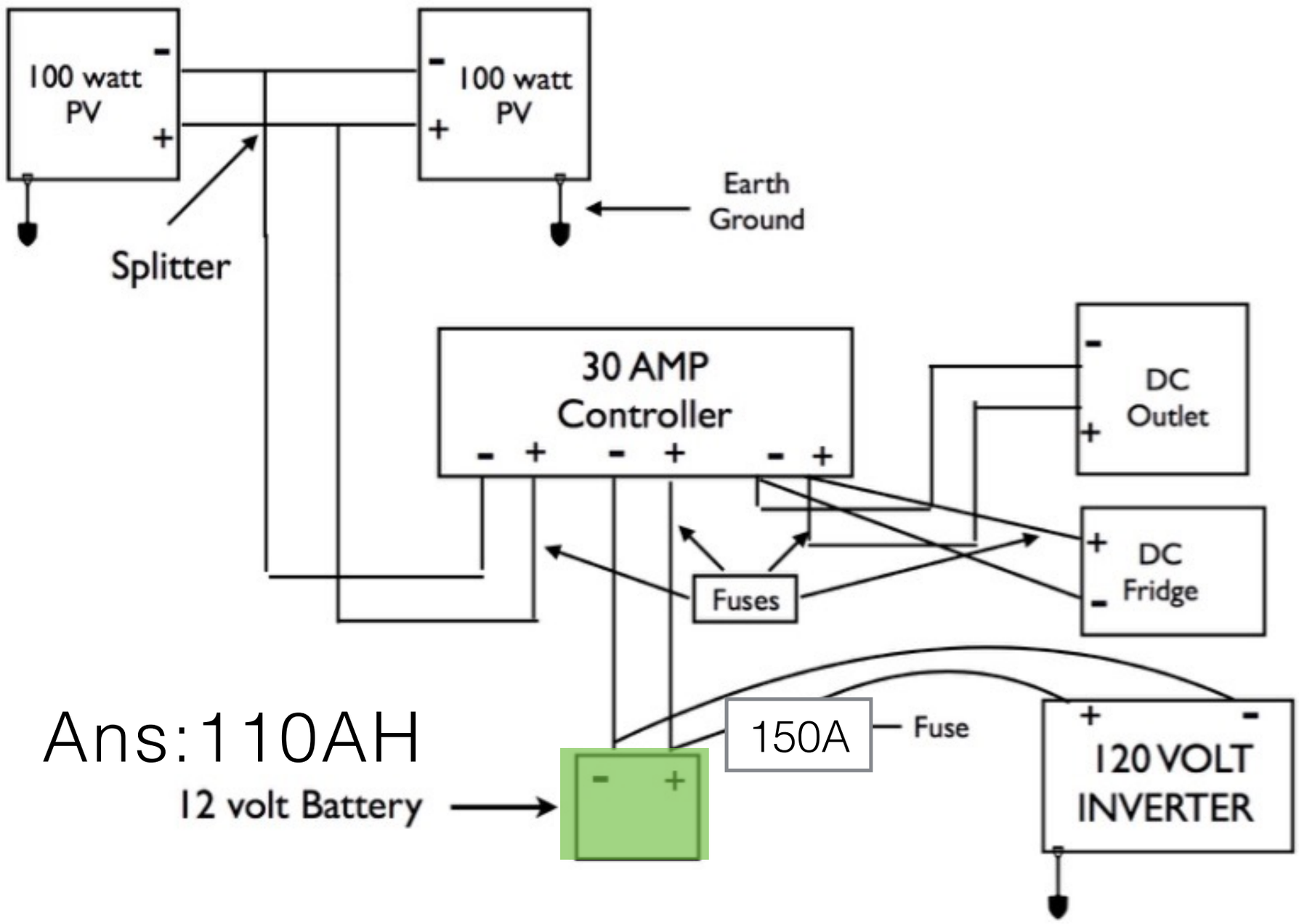

Ans:110AH

Every day you get 800WH of solar power.
every day you get 67AH.
But every night you are stuck
with what ever is in your
110AH battery.
To keep your battery healthy
you don't want to use more than half of it.
So you don't want to use
more than 55AH of your 67AH at night.
55 AH
Squander those extra 12AH during the day.

To repeat...

Your battery can only store 110 amp hours and you shouldn't let it go down more than halfway

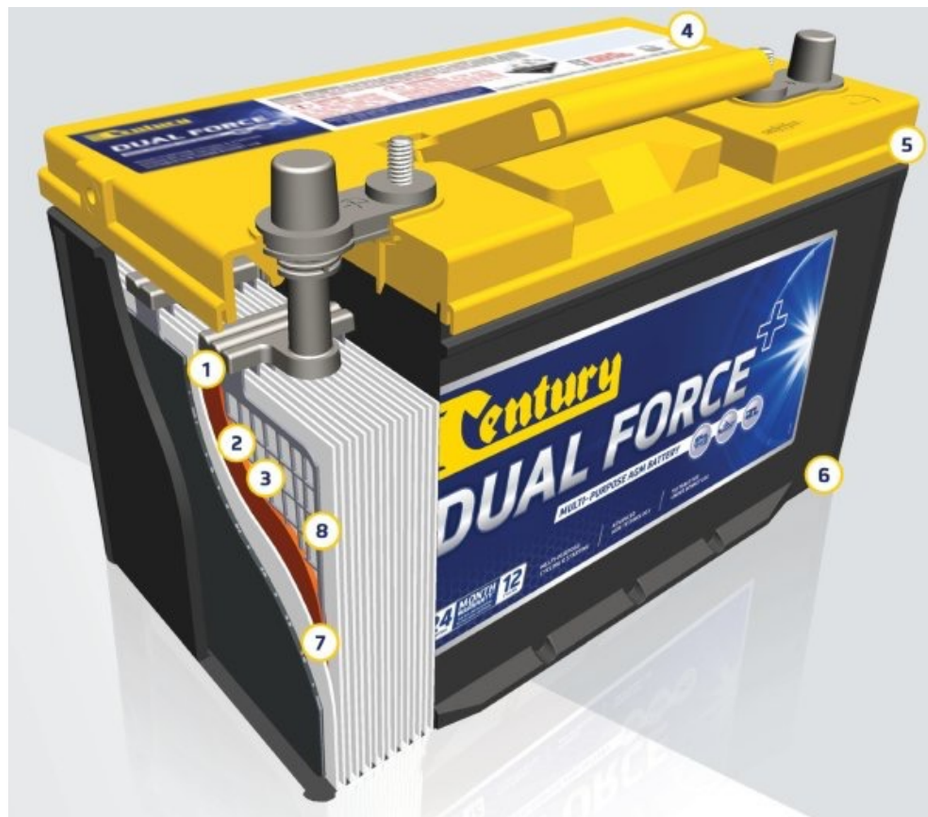

so you should only use 55 amp hours at night when the panels are not working.

Some of your load is going to be
12 Volt Direct Current, **12VDC**,
and some is
120 Volt Alternating Current, **120VAC**.

12VDC

120VAC.

12VDC is what your panels produce and needs no conversion to run **DC** appliances.

But most appliances are made to run on **AC** which is what power companies deliver.
Utilities raise the voltage so that the amperage is less.
Higher amperage requires fatter wires,
too expensive for long distances.

AC appliances run on **115V -120V.**
Your inverter raises the voltage. It creates current that alternates back and forth at 60X per second, 60 Herz.

So let’s figure out what you can run on the Basic

800WH 67AH

Solar Team 4

Solar System

Solar Team 4 Basic System Sample Load

TWO 100 W PV IN PARALLEL ONE 110 AH BATTERY 800 WH PER DAY ÷ 12 VOLTS = 67 AH PER DAY

DC APPLIANCES	VOLTS	AMPS	WATTS	SURGE	HOURS USED PER DAY	WATT HOURS PER DAY	WH ÷ 12V = AMP HOURS PER DAY DRAWN FROM BATTERY NO LOSSES
PHOCOS DC REFRIGERATOR	12 V	0.3 A AVERAGE	3.4 W		CYCLES ON AND OFF OVER 24 HRS	85 WH	7 AH
PHONE & COM-PUTER CHARGING	12 V	0.4 A	5 W		3 HOURS	15 WH	1.25 AH
TOTAL DC LOAD	12 V	1.25 A	15 W			100 WH	8.25 AH
AC APPLIANCES	VOLTS	AMPS	WATTS	SURGE COVERED BY 1500 WATT INVERTER	HOURS USED PER DAY	WATT HOURS PER DAY	WH ÷ 10 = AMP HOURS PER DAY* DRAWN FROM BATTERY INVERTER REQUIRES 1 AMP OF DC INPUT FROM BATTERY FOR EVERY 10 WATTS OF AC OUTPUT.
THREE 7 WATT LED LIGHTS	120 V	0.18 A	21 W		5 HOURS	105 WH	10.5 AH
TV/DVD	120 V	0.8 A	90 W		3 HOURS	270 WH	27 AH
PRESSURE COOKER	120 V	5.8 A	700 W		23 MINS ONCE A WEEK	270 WH NO TV THAT DAY	
COFFEE POT	120 V	5 A	600 W		15 MINUTES	150 WH	15 AH
SMALL TOOL	120 V	4.2 A	500 W	600 W	8 MINUTES	62.5 WH	6.25 AH
TOTAL AC LOAD	120 V	16 A	1331 W NEVER ON ALL AT ONCE			583 WH X 1.2 FOR LOSSES = 700 WH	58.75 AH ONLY USE 55AH AT NIGHT TO KEEP BATTERY HALF FULL
						TOTAL 800 WH	TOTAL 67 AH DRAWN FROM BATTERY

FIRST THREE COLUMNS DESCRIBE THE ALLIANCES THEMSELVES USING WATTS FORMULA: VOLTS X AMPS = WATTS.
LAST COLUMN DESCRIBES WHAT HAPPENS TO YOUR BATTERY WHEN THEY ARE IN USE.

Your **12VDC** Load

12VDC appliances run straight off your controller which manages the **12VDC** power from your photovoltaic panels

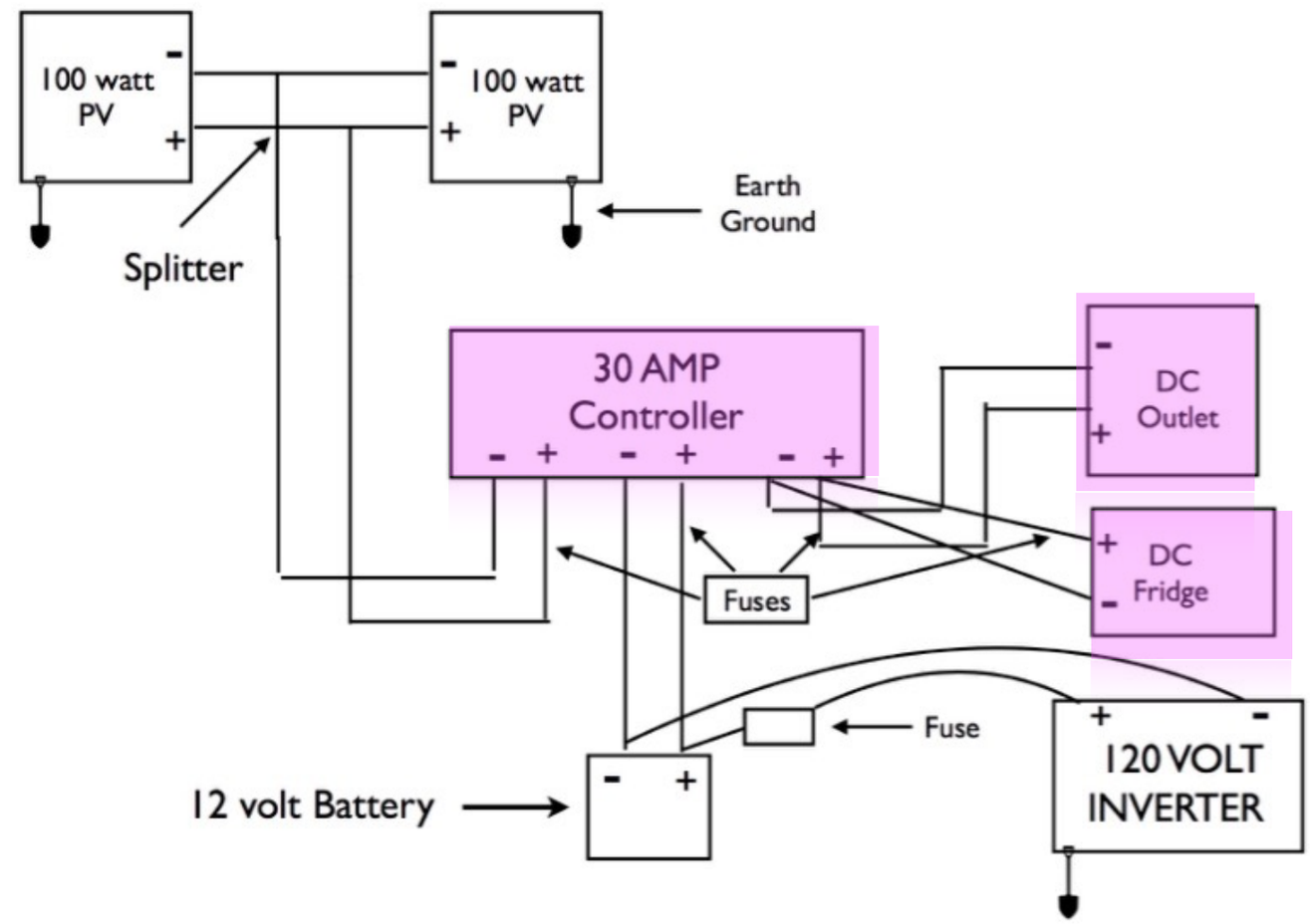

DC APPLIANCES	VOLTS	AMPS	WATTS	SURGE	HOURS USED PER DAY	WATT HOURS PER DAY	WH ÷ 12V = AMP HOURS PER DAY DRAWN FROM BATTERY NO LOSSES
PHOCOS DC REFRIGERATOR	12 V	0.3 A AVERAGE	3.4 W		CYCLES ON AND OFF OVER 24 HRS	85 WH	7 AH
PHONE & COM-PUTER CHARGING	12 V	0.4 A	5 W		3 HOURS	15 WH	1.25 AH
TOTAL DC LOAD	12 V	1.25 A	15 W			100 WH	8.25 AH

Your **120VAC** Load

120VAC appliances run off your inverter which draws **12VDC** amps/current from your battery and converts it into **120V** Alternating Current.

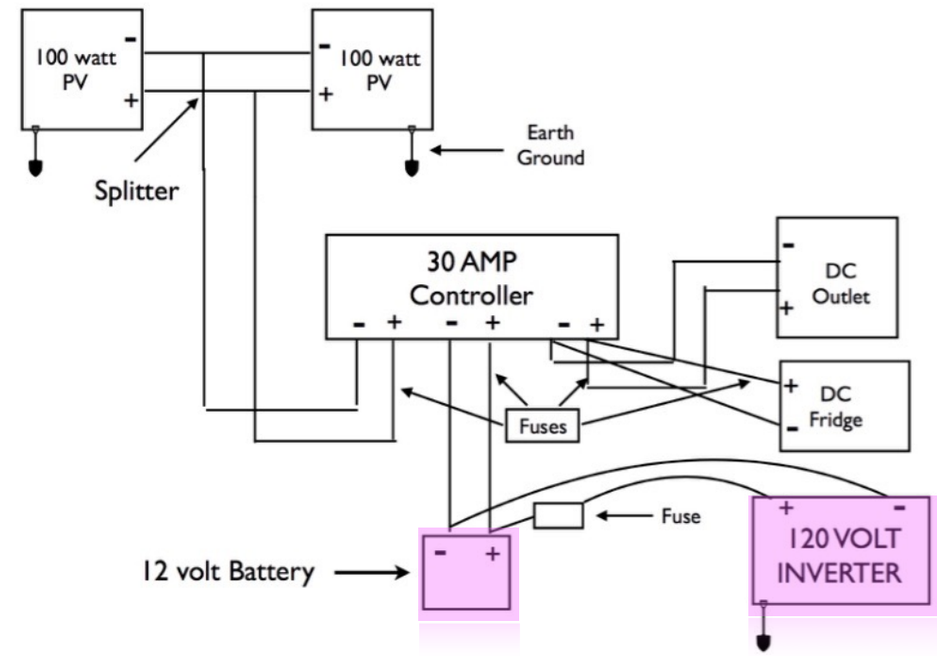

AC APPLIANCES	VOLTS	AMPS	WATTS	SURGE COVERED BY 1500 WATT INVERTER	HOURS USED PER DAY	WATT HOURS PER DAY	WH ÷ 10 = AMP HOURS PER DAY* DRAWN FROM BATTERY INVERTER REQUIRES 1 AMP OF DC INPUT FROM BATTERY FOR EVERY 10 WATTS OF AC OUTPUT.
THREE 7 WATT LED LIGHTS	120 V	0.18 A	21 W		5 HOURS	105 WH	10.5 AH
TV/DVD	120 V	0.8 A	90 W		3 HOURS	270 WH	27 AH
PRESSURE COOKER	120 V	5.8 A	700 W		23 MINS ONCE A WEEK	270 WH NO TV THAT DAY	
COFFEE POT	120 V	5 A	600 W		15 MINUTES	150 WH	15 AH
SMALL TOOL	120 V	4.2 A	500 W	600 W	8 MINUTES	62.5 WH	6.25 AH
TOTAL AC LOAD	120 V	16 A	1331 W NEVER ON ALL AT ONCE			583 WH X 1.2 FOR LOSSES = 700 WH	58.75 AH ONLY USE 55AH AT NIGHT TO KEEP BATTERY HALF FULL
						TOTAL 800 WH	TOTAL 67 AH DRAWN FROM BATTERY

FIRST THREE COLUMNS DESCRIBE THE ALLIANCES THEMSELVES USING WATTS FORMULA: VOLTS X AMPS = WATTS.
LAST COLUMN DESCRIBES WHAT HAPPENS TO YOUR BATTERY WHEN THEY ARE IN USE.

Your inverter requires approximately
one amp of DC Input
for each 10 watts of AC Output,
see last column in chart.
Example
AC Coffee Pot uses150 WH,15 minutes every day
150WH ÷ 10 =15AH from the battery.

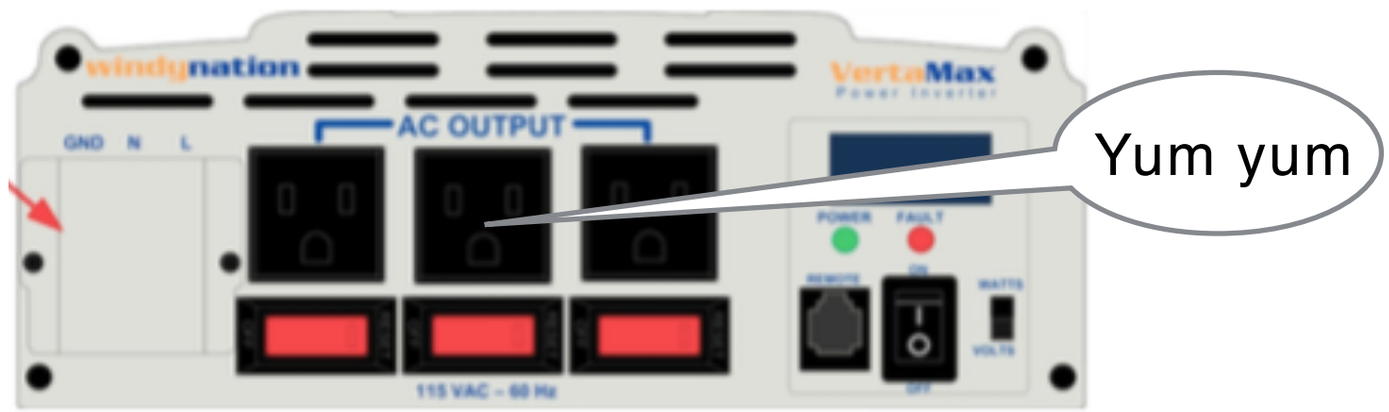

If it were a DC Coffee Pot, no inverter losses,
Watt's Law,
150 watt ÷ 12 volts = 12.5 amps
you would have 2.5 more amp hours
to put in your battery.

Your inverter is
smarter than you are
and it will shut off
once the battery is half full.

Here’s what is says in the manual.

Low Input Voltage

As a battery is used, its voltage begins to decrease. When the inverter senses that the voltage at its DC input has dropped to 10.5V ± 0.3 DC, an audible alarm will sound and operation will remain normal. When this happens, it is important to remove or shut down computers or other sensitive devices that may be connected to the VertaMax and recharge the battery before its capacity drops too low. The inverter can operate while the battery is recharging.

If the audible alarm is ignored and the voltage drops to 10.0V DC, the alarm will beep three (3x) times, the FAULT LED will blink Red, and the inverter will automatically shut down to protect the battery from being over-discharged.

When the input voltage rises to approximately 11.4 – 11.9V DC, the inverter restores to normal operation and the red FAULT indicator will turn off.

3.3.3 Power Overload

When the starting power exceeds the rated surge power or the AC appliances connected to the VertaMax exceed the inverter’s power rating, the alarm will beep continually and the FAULT LED will blink Red. The output voltage will decrease and the inverter will automatically shut down after approx. 20 seconds.

When in over current protection mode, the inverter cannot automatically restore to normal operation; reset to normal operation by using the manual power switch.

Your controller is also brilliant.

It will shut off when the battery is half full.

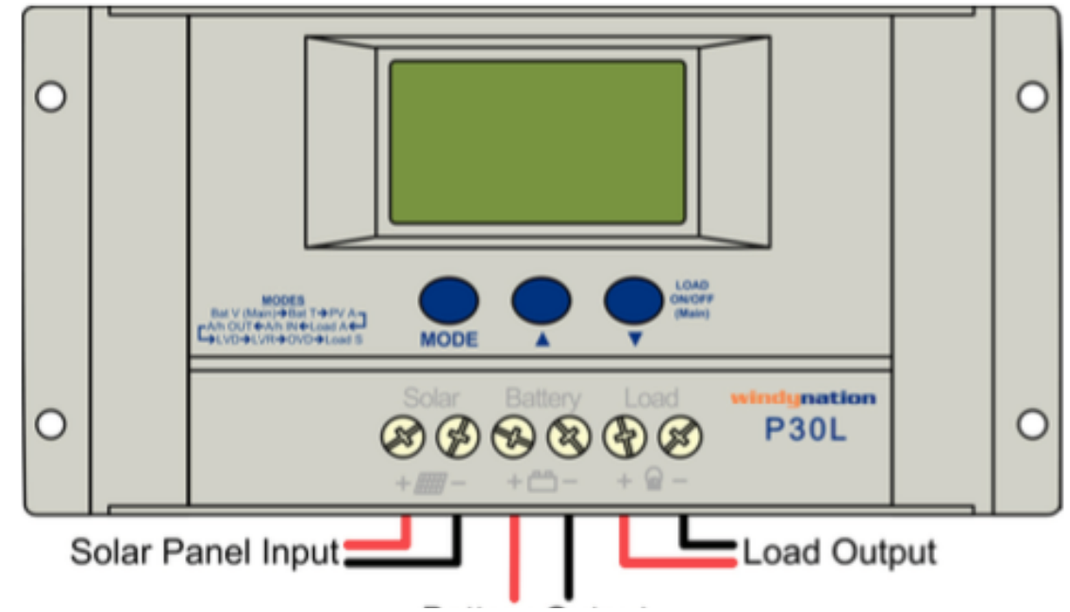

Your LCD screen will tell you how many amp hours you have produced, how many you have used, or how many are being used at the moment.

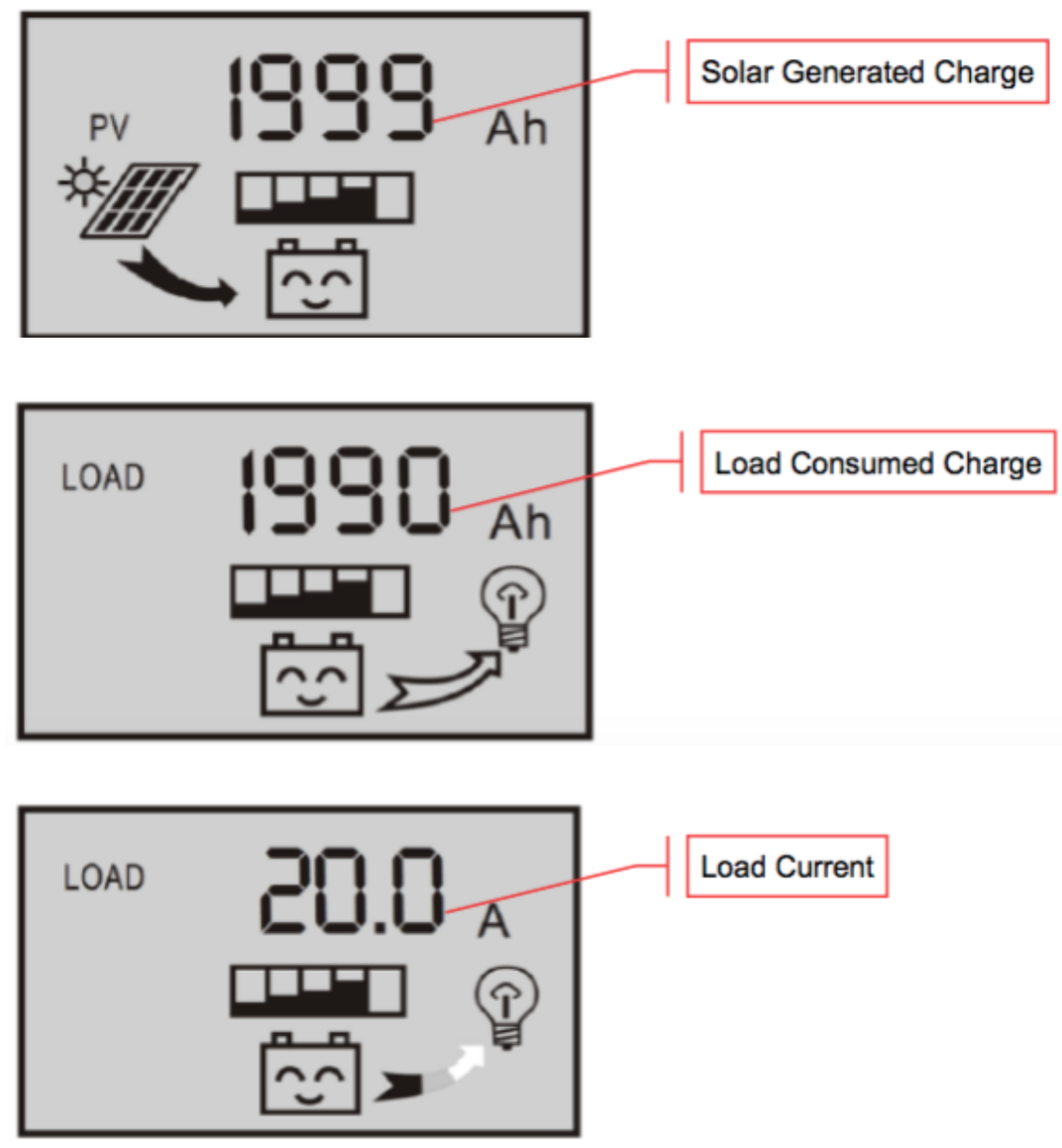

There’s a lot more to know
but you are in good hands
with your smart system.
So plug it in!

For Homework we hope you
will have fun figuring out what
your load will be
and what your load will be
when you expand.

HOMEWORK

Plan your own load within the limitations shown.

We will supply paper printouts

Solar Team 4 Basic System

TWO 100 W PV IN PARALLEL ONE 110 AH BATTERY

800 WH PER DAY ÷ 12 VOLTS = 67 AH PER DAY

DC APPLIANCES	VOLTS	AMPS	WATTS	SURGE	HOURS USED PER DAY	WATT HOURS PER DAY	WH ÷ 12V = AMP HOURS PER DAY DRAWN FROM BATTERY NO LOSSES
TOTAL DC LOAD							
AC APPLI-ANCES	VOLTS	AMPS	WATTS	SURGE COVERED BY 1500 WATT INVERTER	HOURS USED PER DAY	WATT HOURS PER DAY	WH ÷ 10 = AMP HOURS PER DAY* DRAWN FROM BATTERY INVERTER REQUIRES 1 AMP OF DC INPUT FROM BATTERY FOR EVERY 10 WATTS OF AC OUTPUT.
TOTAL AC LOAD							
						TOTAL 800 WH	TOTAL 67 AH DRAWN FROM BATTERY

FIRST THREE COLUMNS DESCRIBE THE ALLIANCES THEMSELVES USING WATTS FORMULA: VOLTS X AMPS = WATTS.
LAST COLUMN DESCRIBES WHAT HAPPENS TO YOUR BATTERY WHEN THEY ARE IN USE.

HOMEWORK

Your system is expandable. You can easily add two more 100 Watt PV panels and another 110 Amp Hour battery.

Plan your double load.

We will supply paper printouts.

Solar Team 4 Expanded System

FOUR 100 W PV IN PARALLEL TWO 110 AH BATTERIES

1600 WH PER DAY ÷ 12 VOLTS = 133 AH PER DAY

DC APPLIANCES	VOLTS	AMPS	WATTS	SURGE	HOURS USED PER DAY	WATT HOURS PER DAY	WH ÷ 12V = AMP HOURS PER DAY DRAWN FROM BATTERY NO LOSSES
TOTAL DC LOAD							
AC APPLI-ANCES	VOLTS	AMPS	WATTS	SURGE COVERED BY 1500 WATT INVERTER	HOURS USED PER DAY	WATT HOURS PER DAY	WH ÷ 10 = AMP HOURS PER DAY* DRAWN FROM BATTERY INVERTER REQUIRES 1 AMP OF DC INPUT FROM BATTERY FOR EVERY 10 WATTS OF AC OUTPUT.
TOTAL AC LOAD							
						TOTAL 1600 WH	TOTAL 133 AH DRAWN FROM BATTERY

FIRST THREE COLUMNS DESCRIBE THE ALLIANCES THEMSELVES USING WATTS FORMULA: VOLTS X AMPS = WATTS.
LAST COLUMN DESCRIBES WHAT HAPPENS TO YOUR BATTERY WHEN THEY ARE IN USE.

and oh those sunless winter days!

If you sense a sunless day coming up
reduce your usage by half
on subsequent sunless days reduce by half again
and so on until the world freezes over.

Ideally one should build a system that can handle
“days of autonomy”
so the system can run on stored charge.
Essentially it means having a bigger system.


until next time